EVALUATION REPORT

FLORIDA BUILDING CODE, 9TH EDITION (2026)

Issued July 30, 2026

Manufacturer: O'HAGIN MANUFACTURING, LLC
210 Classic Court, Suite 100
Rohnert Park, CA 94928
(877) 324-0444
www.ohagin.com

Manufacturing Location: Rohnert Park, CA
Lakeland, FL

Quality Assurance: QAI Laboratories (QUA7628)

SCOPE

Category: Roofing
Code Editon: Florida Building Code, 9th Edition (2026) including High-Velocity Hurricane Zones (HVHZ)
Subcategory: Roofing Accessories that are an Integral Part of the Roofing System
Code Sections: 1503.5, 1523.6.5.2.13
Properties: Roof Ventilation

REFERENCES

Entity	Report No.	Standard	Year
National Certified Testing Laboratories (TST1589)	NCTL-210-4158-01	ASTM E 330/E 330M	2014(2021)
PRI Construction Materials Technologies (TST5878)	OHI-037-02-01	TAS 100(A)[1]	2023
PRI Construction Materials Technologies (TST5878)	OHI-039-02-01	ASTM E 330/E 330M	2014(2021)
PRI Construction Materials Technologies (TST5878)	OHI-039-02-02	ASTM E 330/E 330M	2014(2021)
PRI Construction Materials Technologies (TST5878)	OHI-039-02-03	ASTM E 330/E 330M	2014(2021)
PRI Construction Materials Technologies (TST5878)	642T0001	TAS 100(A)[1]	2023
PRI Construction Materials Technologies (TST5878)	642T0002	TAS 100(A)[1]	2023
PRI Construction Materials Technologies (TST5878)	642T0003	TAS 100(A)[1]	2023
PRI Construction Materials Technologies (TST5878)	642T0004	TAS 100(A)[1]	2023
PRI Construction Materials Technologies (TST5878)	642T0005	TAS 100(A)[1]	2023
PRI Construction Materials Technologies (TST5878)	642T0006	TAS 100(A)[1]	2023
PRI Construction Materials Technologies (TST5878)	642T0007	TAS 100(A)[1]	2023
PRI Construction Materials Technologies (TST5878)	642T0008	TAS 100(A)[1]	2023

[1]Submitted testing fulfills the requirements of TAS 110-2000 for static vents.

This evaluation report is provided for State of Florida product approval under Rule 61G20-3. The manufacturer shall notify CREEK Technical Services, LLC of any product changes or quality assurance changes throughout the duration for which this report is valid. This evaluation report does not express nor imply warranty, installation, recommended use, or other product attributes that are not specifically addressed herein.

PRODUCT DESCRIPTION AND APPLICATION

Cloaked Vent Tile
&
Fire & Ice® - Flame and Ember Resistant Off-Ridge Attic Vent:

Two-piece metal roof vent for tile roofs consisting of a Primary Vent (subflashing) with a diverter flange and a profile-specific Secondary Vent (cover). Composed of minimum 26 ga. ASTM A653 G90 steel, 0.032 aluminum or 16 oz. copper. Material shall conform to FBC Section 1507.4.3 (non-HVHZ) and 1517.6 (HVHZ).

PRIMARY VENT DETAIL:

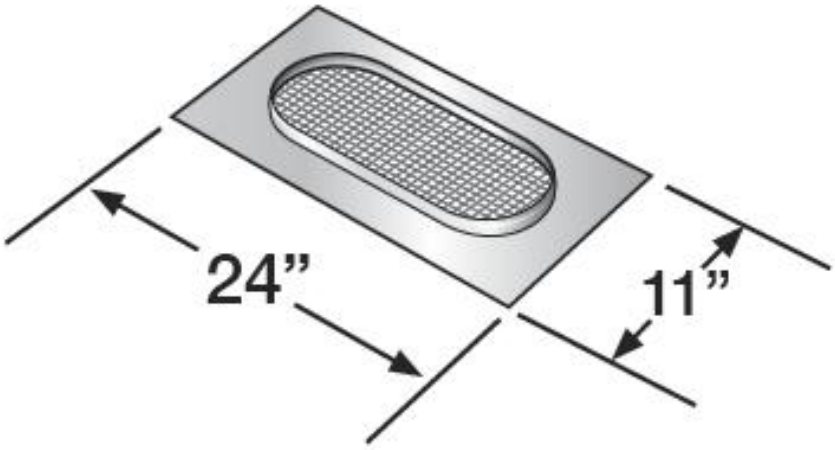

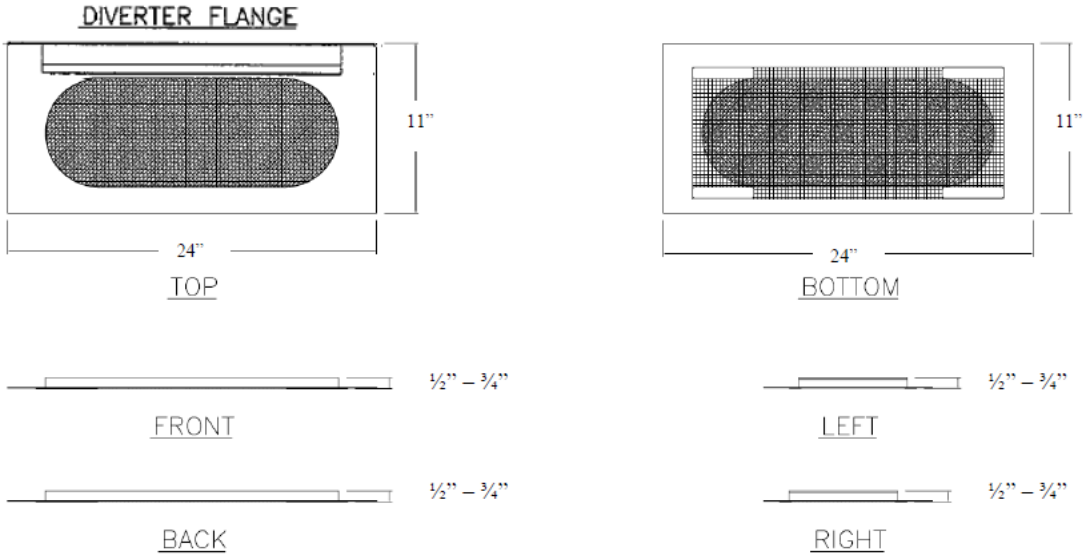

This evaluation report is provided for State of Florida product approval under Rule 61G20-3. The manufacturer shall notify CREEK Technical Services, LLC of any product changes or quality assurance changes throughout the duration for which this report is valid. This evaluation report does not express nor imply warranty, installation, recommended use, or other product attributes that are not specifically addressed herein.

SECONDARY VENT DETAIL:

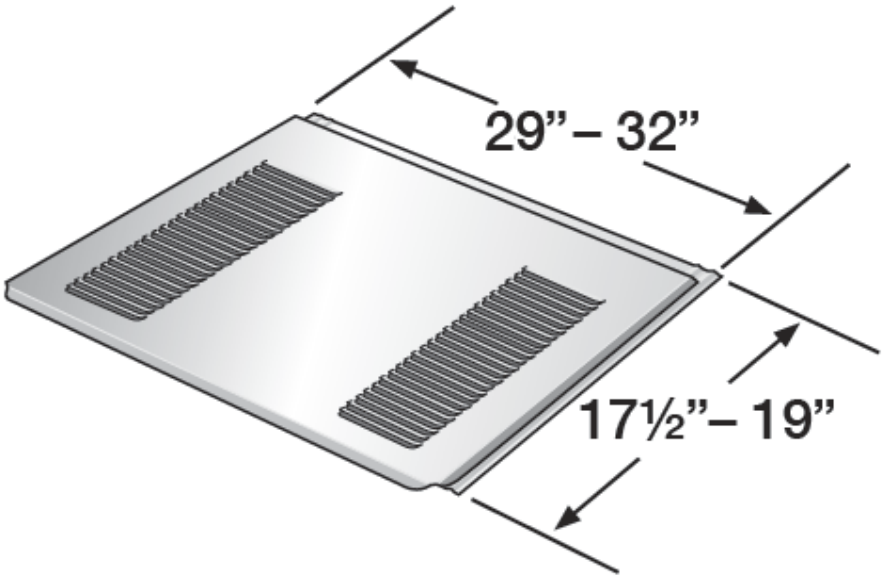

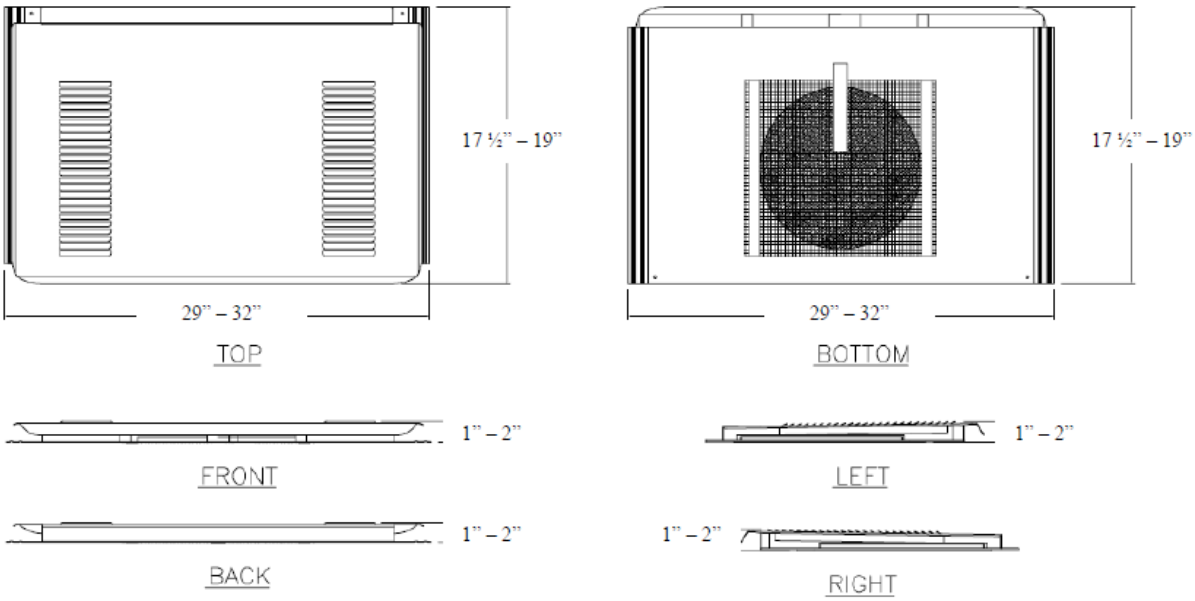

Flat-Profile
(For use with Low Profile Roof Tile)

This evaluation report is provided for State of Florida product approval under Rule 61G20-3. The manufacturer shall notify CREEK Technical Services, LLC of any product changes or quality assurance changes throughout the duration for which this report is valid. This evaluation report does not express nor imply warranty, installation, recommended use, or other product attributes that are not specifically addressed herein.

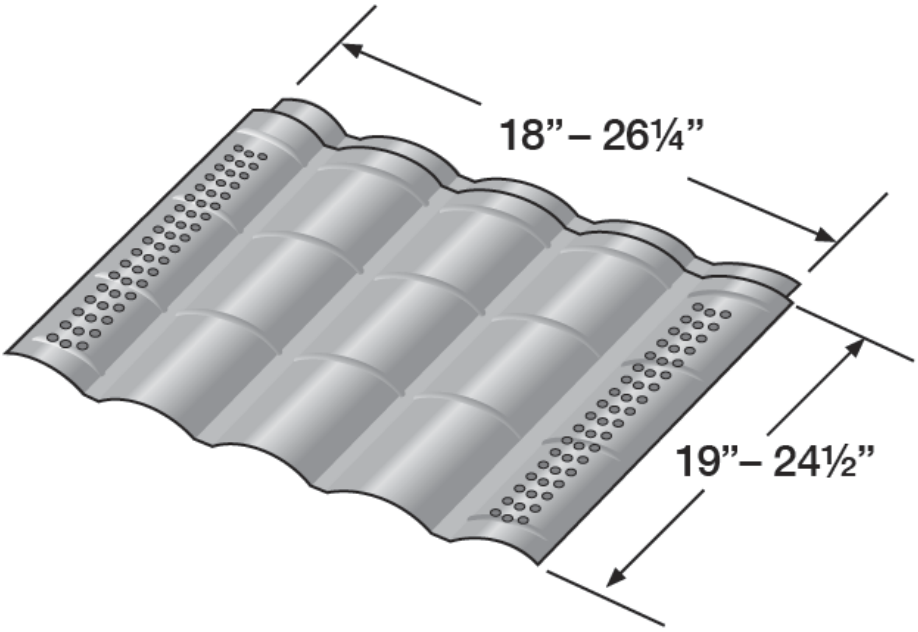

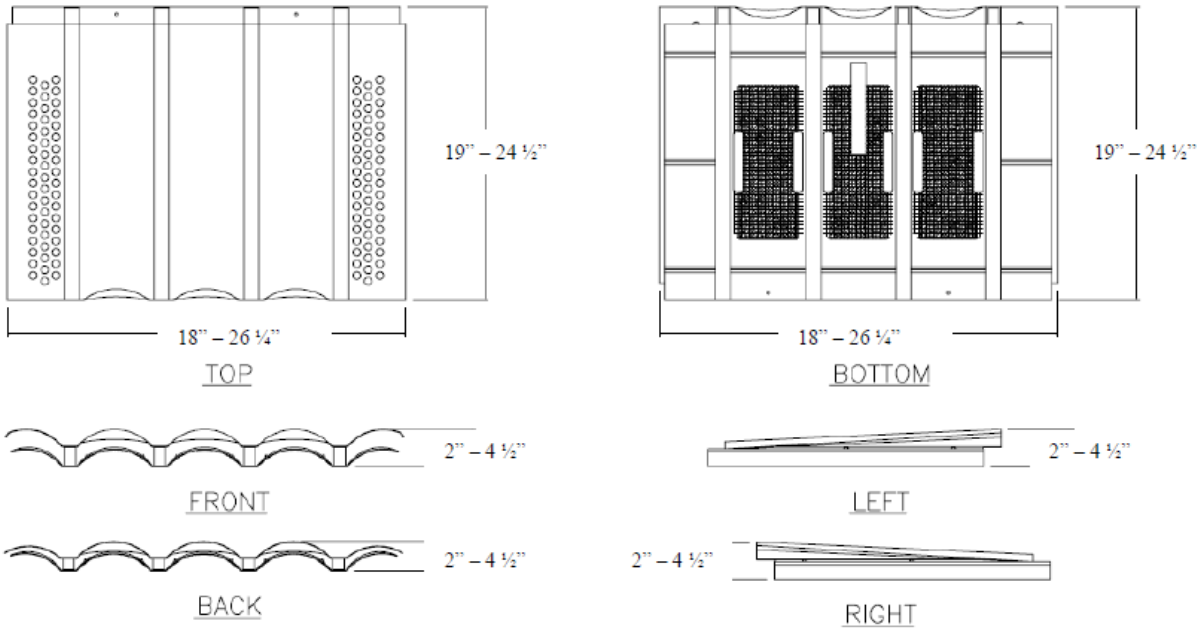

M-Profile
(For use with Medium Profile Roof Tile)

This evaluation report is provided for State of Florida product approval under Rule 61G20-3. The manufacturer shall notify CREEK Technical Services, LLC of any product changes or quality assurance changes throughout the duration for which this report is valid. This evaluation report does not express nor imply warranty, installation, recommended use, or other product attributes that are not specifically addressed herein.

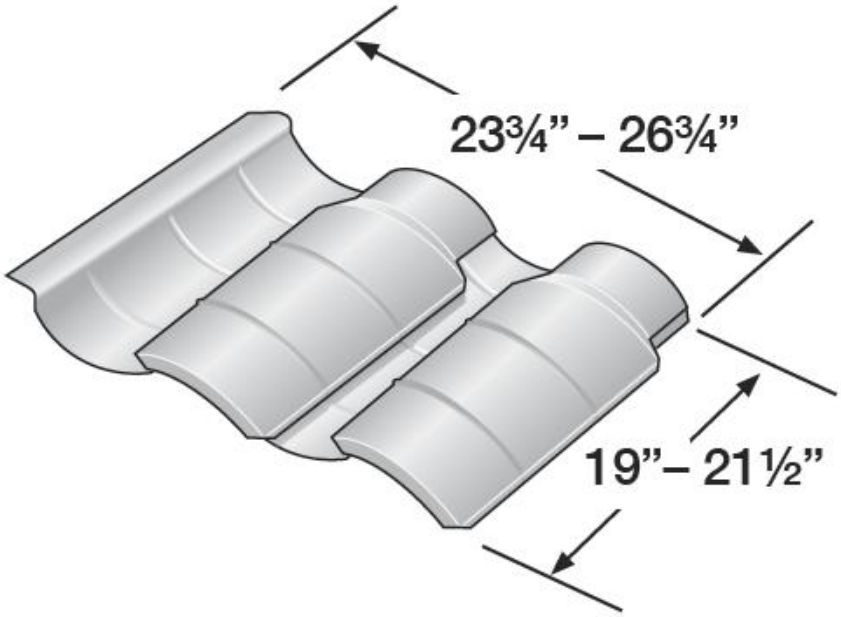

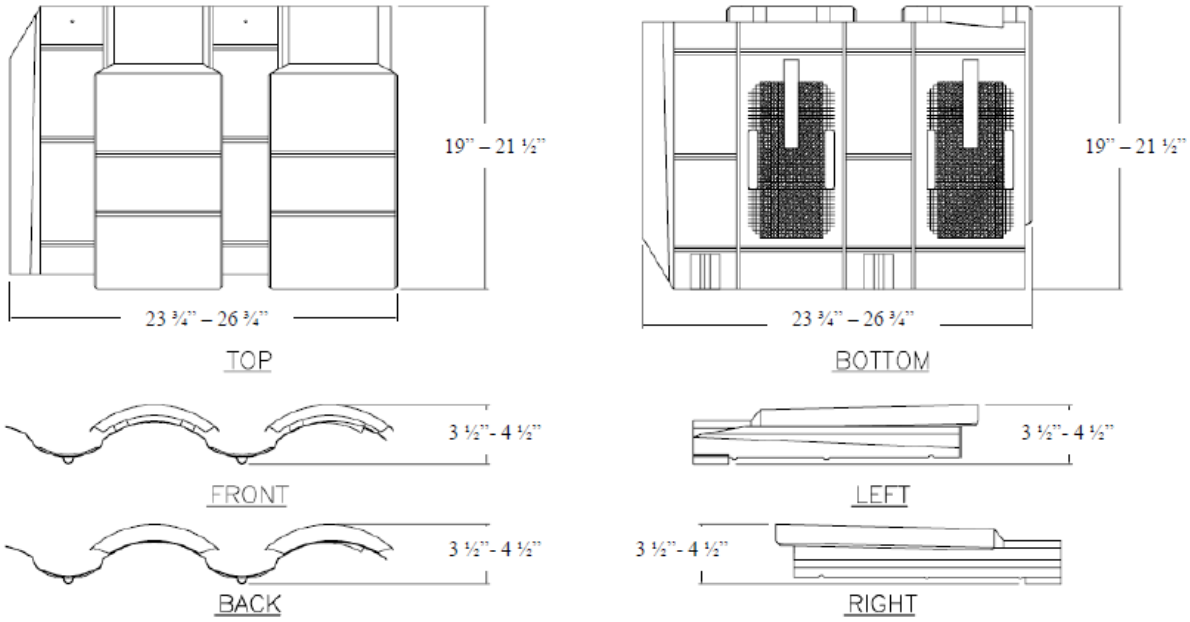

S-Profile
(For use with High Profile Roof Tile)

This evaluation report is provided for State of Florida product approval under Rule 61G20-3. The manufacturer shall notify CREEK Technical Services, LLC of any product changes or quality assurance changes throughout the duration for which this report is valid. This evaluation report does not express nor imply warranty, installation, recommended use, or other product attributes that are not specifically addressed herein.

Cloaked Vent Tile & Fire & Ice® - Flame and Ember Resistant Off-Ridge Attic Vent:

Deck Type: Roof deck shall be constructed of closely fitted sheathing for new or existing construction. Roof deck shall be designed and installed in accordance with FBC requirements.

Roof slope: Minimum 2:12

Attachment: Select one of the Methods below:

Method #1 (Flat-Profile, M-Profile, & S-Profile)
For use in HVHZ and Non-HVHZ with Clay or Concrete Tile; Maximum 40-ft installation height

Roof sheathing shall be minimum minimum 15/32 CAT PS 1-09, APA span-rated plywood.

Starting approximately 18-inches down from the ridge and a minimum 12-inches from the edge, cut a 19 x 7-inch hole through wood sheathing such that it would be beneath or up to four tiles to the right or left of the Secondary Vent and within the same tile course. Brush away dust and debris.

Set outer flange of Primary Vent (with or without diverter) in a 1/8-inch bed of ASTM D 4586 roof cement. Fasten Primary Vent with minimum 12 ga. x 1-1/4-inch ring shank roofing nails (shall comply with FBC Section 1506.5); 1-inch from outside edge and of flange and 4-inches o.c. around the perimeter, ensuring 3/8-inch penetration into or through wood deck. Seal nails with a 3-inch wide piece of ASTM D 1668 fabric fully embedded in ASTM D 4586 roof cement. If roof tiles are placed above the Primary Vent, they shall be sealed to the preceding course and adjacent tiles by applying a 1/2-inch bead of ASTM C 920 sealant.

Secondary Vent will take the place of two field tiles. Install Secondary Vent up to four tiles to the right or left of the Primary Vent and fasten top flange of vent using two (2) 12ga. x 1-1/4" galvanized ring shank roofing nails in the premarked locations. Apply a 1/2-inch bead of ASTM C 920 sealant to seal Secondary Vent to the preceding tile course. Engage wind clip under preceding tile course. A portion of the tile batten lug may be "knocked out" to facilitate engagement. Nest adjacent tiles into the vent sides.

Method #2 (Flat-Profile only)
For use in Non-HVHZ only with Concrete Tile; -105psf Maximum Design Pressure

Roof sheathing shall be minimum 7/16 CAT PS 2-10, APA span-rated OSB or minimum 15/32 CAT PS 1-09, APA span-rated plywood.

Starting approximately 18-inches down from the ridge and a minimum 12-inches from the edge, cut a 19 x 7-inch hole through wood sheathing such that it would be beneath or up to four tiles to the right or left of the Secondary Vent and within the same tile course. Brush away dust and debris.

Set outer flange of Primary Vent (with or without diverter) in a 1/8-inch bed of ASTM D 4586 roof cement. Fasten Primary Vent with minimum 12 ga. x 1-1/4-inch ring shank roofing nails (shall comply with FBC Section 1506.5); 1-inch from outside edge and of flange and 4-inches o.c. around the perimeter, ensuring 3/8-inch penetration into or through wood deck. Seal nails with a 3-inch wide piece of ASTM D 1668 fabric fully embedded in ASTM D 4586 roof cement. If roof tiles are placed above the Primary Vent, they shall be sealed to the preceding course and adjacent tiles by applying a 1/2-inch bead of ASTM C 920 sealant.

Secondary Vent will take the place of two field tiles. Install Secondary Vent up to four tiles to the right or left of the Primary Vent. Place by bending the wind clip tightly under the preceding course of tile and secure with two (2) #8-9 x 2-inch galvanized roof tile screws in the premarked locations. Apply a 1/2-inch bead of ASTM C 920 sealant to seal Secondary Vent to the preceding tile course. A portion of the tile batten lug may be "knocked out" to facilitate engagement. Nest adjacent tiles into the vent sides.

Adjacent concrete tile shall be secured with (2) #8-11 x 2.5-inch galvanized roof tile screws in the designated attachment holes.

This evaluation report is provided for State of Florida product approval under Rule 61G20-3. The manufacturer shall notify CREEK Technical Services, LLC of any product changes or quality assurance changes throughout the duration for which this report is valid. This evaluation report does not express nor imply warranty, installation, recommended use, or other product attributes that are not specifically addressed herein.

Method #3 (M-Profile only)
For use in Non-HVHZ only with Concrete Tile; -127.5psf Maximum Design Pressure

Roof sheathing shall be minimum 7/16 CAT PS 2-10, APA span-rated OSB or minimum 15/32 CAT PS 1-09, APA span-rated plywood.

Starting approximately 18-inches down from the ridge and a minimum 12-inches from the edge, cut a 19 x 7-inch hole through wood sheathing such that it would be beneath or up to four tiles to the right or left of the Secondary Vent and within the same tile course. Brush away dust and debris.

Set outer flange of Primary Vent (with or without diverter) in a 1/8-inch bed of ASTM D 4586 roof cement. Fasten Primary Vent with minimum 12 ga. x 1-1/4-inch ring shank roofing nails (shall comply with FBC Section 1506.5); 1-inch from outside edge and of flange and 4-inches o.c. around the perimeter, ensuring 3/8-inch penetration into or through wood deck. Seal nails with a 3-inch wide piece of ASTM D 1668 fabric fully embedded in ASTM D 4586 roof cement. If roof tiles are placed above the Primary Vent, they shall be sealed to the preceding course and adjacent tiles by applying a 1/2-inch bead of ASTM C 920 sealant.

Secondary Vent will take the place of two field tiles. Install Secondary Vent up to four tiles to the right or left of the Primary Vent. Place by bending the wind clip tightly under the preceding course of tile and secure with two (2) #8-9 x 2-inch galvanized roof tile screws in the premarked locations. Apply a 1/2-inch bead of ASTM C 920 sealant to seal Secondary Vent to the preceding tile course. A portion of the tile batten lug may be "knocked out" to facilitate engagement. Nest adjacent tiles into the vent sides.

Adjacent concrete tile shall be secured with (2) #8-11 x 2.5-inch galvanized roof tile screws in the designated attachment holes.

Method #4 (S-Profile only)
For use in Non-HVHZ only with Concrete Tile; -120psf Maximum Design Pressure

Roof sheathing shall be minimum 7/16 CAT PS 2-10, APA span-rated OSB or minimum 15/32 CAT PS 1-09, APA span-rated plywood.

Starting approximately 18-inches down from the ridge and a minimum 12-inches from the edge, cut a 19 x 7-inch hole through wood sheathing such that it would be beneath or up to four tiles to the right or left of the Secondary Vent and within the same tile course. Brush away dust and debris.

Set outer flange of Primary Vent (with or without diverter) in a 1/8-inch bed of ASTM D 4586 roof cement. Fasten Primary Vent with minimum 12 ga. x 1-1/4-inch ring shank roofing nails (shall comply with FBC Section 1506.5); 1-inch from outside edge and of flange and 4-inches o.c. around the perimeter, ensuring 3/8-inch penetration into or through wood deck. Seal nails with a 3-inch wide piece of ASTM D 1668 fabric fully embedded in ASTM D 4586 roof cement. If roof tiles are placed above the Primary Vent, they shall be sealed to the preceding course and adjacent tiles by applying a 1/2-inch bead of ASTM C 920 sealant.

Secondary Vent will take the place of two field tiles. Install Secondary Vent up to four tiles to the right or left of the Primary Vent. Place by bending the wind clip tightly under the preceding course of tile and secure with two (2) #8-11 x 2.5-inch galvanized roof tile screws in the premarked locations. Apply a 1/2-inch bead of ASTM C 920 sealant to seal Secondary Vent to the preceding tile course. A portion of the tile batten lug may be "knocked out" to facilitate engagement. Nest adjacent tiles into the vent sides.

Adjacent concrete tile shall be secured with (2) #8-11 x 2.5-inch galvanized roof tile screws in the designated attachment holes.

This evaluation report is provided for State of Florida product approval under Rule 61G20-3. The manufacturer shall notify CREEK Technical Services, LLC of any product changes or quality assurance changes throughout the duration for which this report is valid. This evaluation report does not express nor imply warranty, installation, recommended use, or other product attributes that are not specifically addressed herein.

Low Profile Tapered Composition Vent 72"
&
Fire & Ice® - Flame and Ember Resistant Compo 72" Shingle Vent:

18" x 24" x 2-3/8" (32" x 25" flange base) static off-ridge vent composed of minimum 26 ga. ASTM A653 G90 steel, 0.032 aluminum or 16 oz. copper. Material shall conform to FBC Section 1507.4.3 (non-HVHZ) and 1517.6 (HVHZ).

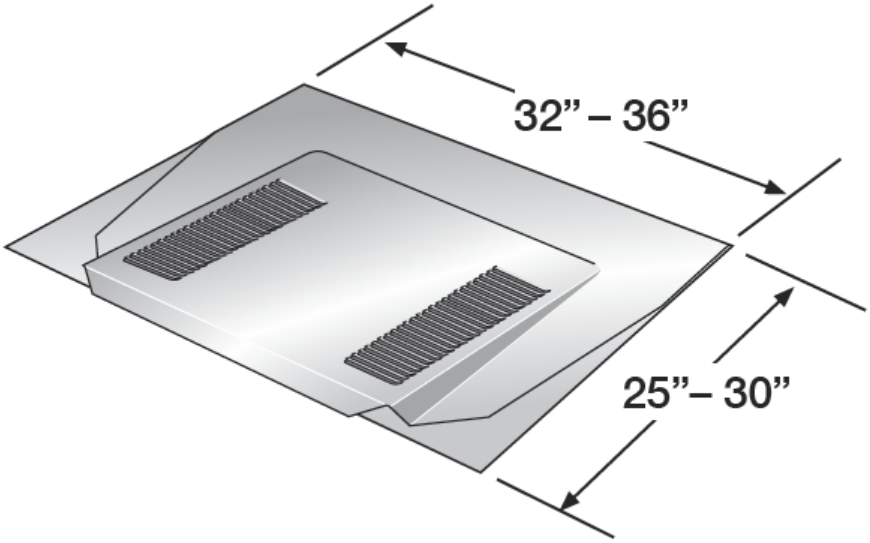

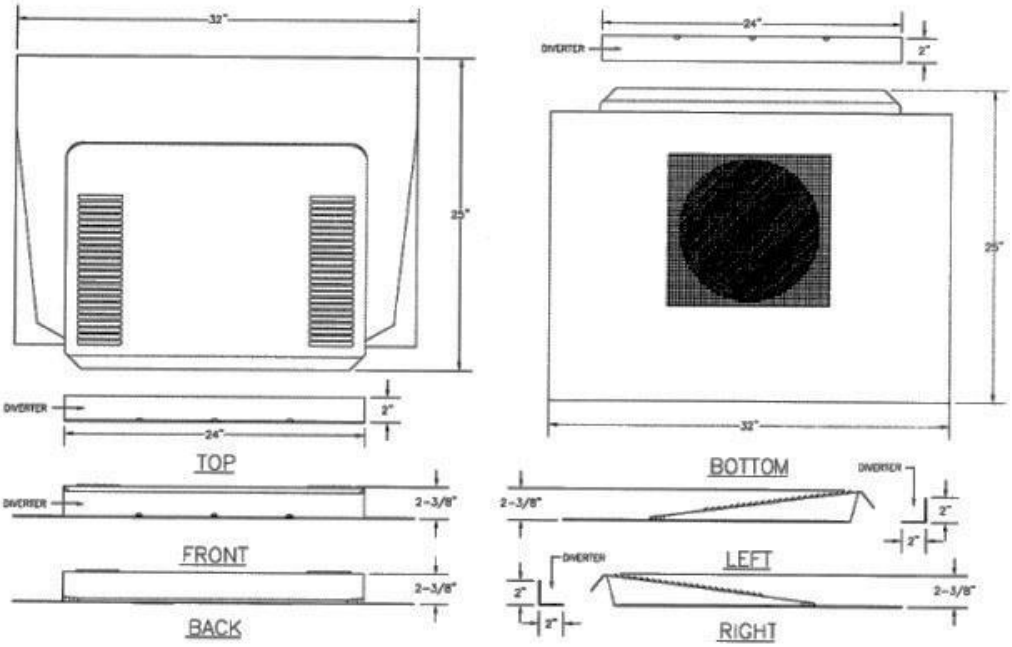

This evaluation report is provided for State of Florida product approval under Rule 61G20-3. The manufacturer shall notify CREEK Technical Services, LLC of any product changes or quality assurance changes throughout the duration for which this report is valid. This evaluation report does not express nor imply warranty, installation, recommended use, or other product attributes that are not specifically addressed herein.

Low Profile Tapered Composition Vent 72" & Fire & Ice® - Flame and Ember Resistant Compo 72" Shingle Vent:

Deck Type: Roof deck shall be constructed of closely fitted sheathing for new or existing construction. Roof deck shall be designed and installed in accordance with FBC requirements.

Roof slope: Minimum 2:12

Attachment: Select one of the Methods below:

Method #1:
For use in HVHZ and Non-HVHZ; Maximum 40-ft installation height

Roof sheathing shall be minimum 15/32 CAT PS 1-09, APA span-rated plywood.

Cut an 11 x 11-inch hole through wood sheathing approximately 18-inches below the ridge and minimum 12-inches from the edge. Brush away dust and debris.

Apply two beads of ASTM D 4586 roofing cement with the first applied around the vent opening in the roof deck and the second applied around the inside perimeter of the vent flange. Place vent directly over the hole, ensuring the vent sits flat on the roof with the top half of the flange seated beneath shingles and the bottom half of the flange seated atop shingles. Fasten vent with minimum 12 ga. ring shank roofing nails (shall comply with FBC Section 1506.5) installed 1-inch from outside edge of flange and 4-inches o.c. along the back and sides of the flange, ensuring 3/8-inch penetration into or through wood deck (Minimum 18 nails per vent).

Install the high wind diverter in front of the leading edge of vent approximately 2 1/2-inches from the vent and seal to the roof cover with ASTM D 4586 roofing cement. Fasten diverter with min. 12 ga. ring shank roofing nails (shall comply with FBC Section 1506.5) installed 1-inch from edge of flange and 4-inches o.c. along the flange, ensuring 3/8-inch penetration through wood deck.

Seal all nails, loosened shingles and vent flange with ASTM D 4586 roofing cement.

Method #2 (Min. 26 ga. ASTM A653 G90 steel only)
For use in Non-HVHZ only; -80psf Maximum Design Pressure

Roof sheathing shall be minimum 15/32 CAT PS 1-09, APA span-rated plywood.

Cut an 11 x 11-inch hole through wood sheathing approximately 18-inches below the ridge and minimum 12-inches from the edge. Brush away dust and debris.

Apply two beads of ASTM D 4586 roofing cement with the first applied around the vent opening in the roof deck and the second applied around the inside perimeter of the vent flange. Place vent directly over the hole, ensuring the vent sits flat on the roof with the top half of the flange seated beneath shingles and the bottom half of the flange seated atop shingles. Fasten vent with minimum 12 ga. ring shank roofing nails (shall comply with FBC Section 1506.5) installed 1-inch from outside edge of flange and 4-inches o.c. along the back and sides of the flange, ensuring 3/8-inch penetration into or through wood deck (Minimum 18 nails per vent).

Install the high wind diverter in front of the leading edge of vent approximately 2 1/2-inches from the vent and seal to the roof cover with ASTM D 4586 roofing cement. Fasten diverter with min. (8) 12 ga. ring shank roofing nails (shall comply with FBC Section 1506.5) installed 2-inch from edge of flange and 4-inches o.c. along the flange, ensuring 3/8-inch penetration through wood deck. Min. (10) 12 ga. ring shank roofing nails shall be fastened through the shingles and vent on the top of the vent at approximately 1.5-inch, 3.5-inch and 9-inch from each side and (2) on each side at approximately 8.25inch and 14-inch from the top edge of the vent.

Seal all nails, loosened shingles and vent flange with ASTM D 4586 roofing cement.

Allowable Roof Coverings: Asphalt shingles

This evaluation report is provided for State of Florida product approval under Rule 61G20-3. The manufacturer shall notify CREEK Technical Services, LLC of any product changes or quality assurance changes throughout the duration for which this report is valid. This evaluation report does not express nor imply warranty, installation, recommended use, or other product attributes that are not specifically addressed herein.

Universal Direct Deck Attic Vent: 32" x 31-1/2" x 6" static off-ridge vent composed of minimum 26 ga. ASTM A653 G90 steel, 0.032 aluminum or 16 oz. copper. Material shall conform to FBC Section 1507.4.3 (non-HVHZ) and 1517.6 (HVHZ).

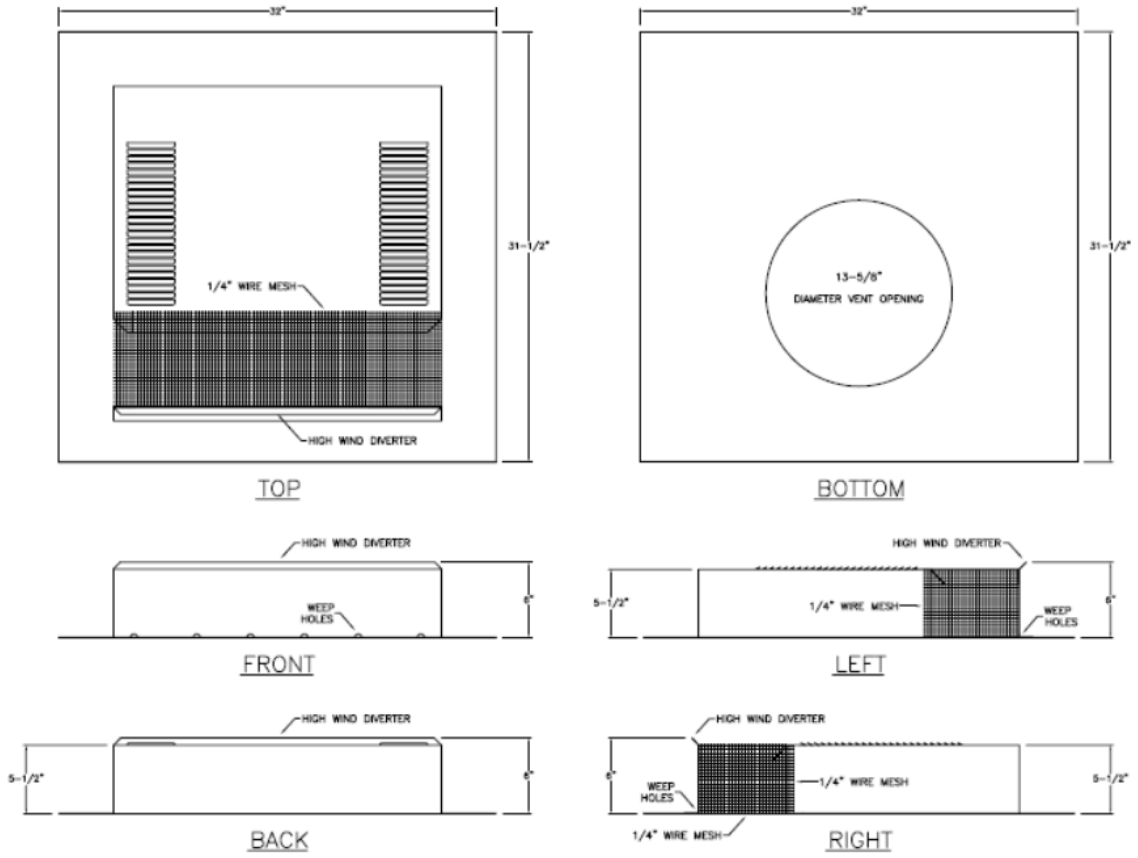

Universal Direct Deck Attic Vent:

Deck Type: Roof deck shall be minimum 15/32 CAT PS 1-09, APA span-rated plywood. Roof deck shall be designed and installed in accordance with FBC requirements.

Roof slope: Minimum 2:12

Installation Height: Maximum 40-ft

Attachment: Cut a 14 x 14-inch hole through wood sheathing and centered between roof trusses. Brush away dust and debris.

Place vent directly over the hole, ensuring the vent is centered over deck opening. Set vent into a bed of ASTM D 4586 roofing cement. Fasten vent with minimum 12 ga. 1-1/4" ring shank roofing nails (shall comply with FBC Section 1506.5) installed 1-inch from outside edge of flange and 4-6 inches o.c. around the flange perimeter, ensuring 3/8-inch penetration into or through wood deck.

Seal all nails and exterior edge of vent flange with a 3-inch wide strip of ASTM D 1668 fabric embedded in ASTM D 4586 roofing cement.

Allowable Roof Coverings: Clay or Concrete Tiles

This evaluation report is provided for State of Florida product approval under Rule 61G20-3. The manufacturer shall notify CREEK Technical Services, LLC of any product changes or quality assurance changes throughout the duration for which this report is valid. This evaluation report does not express nor imply warranty, installation, recommended use, or other product attributes that are not specifically addressed herein.

LIMITATIONS

1) Fire Classification is outside the scope of this evaluation.
2) The roof deck and deck attachment shall be designed by others in accordance with the FBC.
3) Vents shall be installed in strict compliance with this evaluation report and the manufacturer's published installation instructions. In the event of conflict, the more restrictive installation shall be enforced.
4) Deck substrates shall be clean, dry, and free from any irregularities and debris. All fasteners in the deck shall be checked for protrusion prior to installation.
5) Installation of the roof assembly is outside the scope of this evaluation.
6) Vents are intended to provide passive ventilation for an enclosed attic in residential construction applications.
7) Materials shall conform to FBC Section 1506 and 1711.
8) All products listed in this report shall be manufactured under a quality assurance program in compliance with Rule 61G20-3.

COMPLIANCE STATEMENT

This report has been prepared in accordance with F.A.C. Rule 61G20-3.

This item has been digitally signed and sealed by Zachary R. Priest, PE, on 7/30/2026.

Printed copies of this document are not considered signed and sealed and the signature must be verified on any electronic copies.

Digitally signed by Zachary R. Priest

2026.07.30 11:50:49 -04'00'

Zachary R. Priest, P.E.
Florida Registration No. 74021
Organization No. ANE9641

CERTIFICATION OF INDEPENDENCE

CREEK Technical Services, LLC does not have, nor will it acquire, a financial interest in any company manufacturing or distributing products under this evaluation.

CREEK Technical Services, LLC is not owned, operated, or controlled by any company manufacturing or distributing products under this evaluation.

Zachary R. Priest, P.E. does not have, nor will acquire, a financial interest in any company manufacturing or distributing products under this evaluation.

Zachary R. Priest, P.E. does not have, nor will acquire, a financial interest in any other entity involved in the approval process of the product.

END OF REPORT

This evaluation report is provided for State of Florida product approval under Rule 61G20-3. The manufacturer shall notify CREEK Technical Services, LLC of any product changes or quality assurance changes throughout the duration for which this report is valid. This evaluation report does not express nor imply warranty, installation, recommended use, or other product attributes that are not specifically addressed herein.